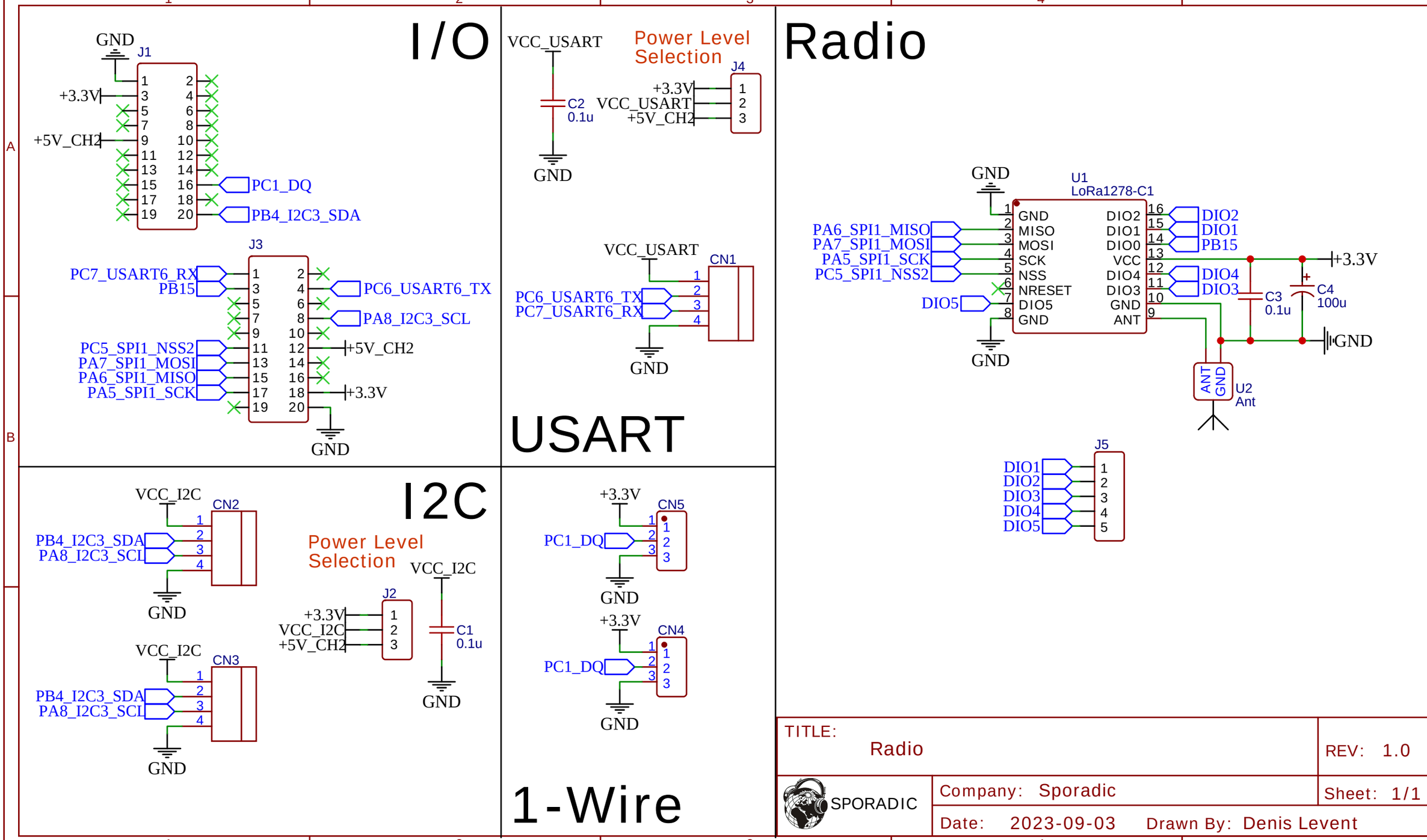
I/O
J1
GND
+3.3V
+5V_CH2
PC1_DQ
PB4_I2C3_SDA
J3
PC7_USART6_RX
PB15
PC6_USART6_TX
PA8_I2C3_SCL
PC5_SPI1_NSS2
PA7_SPI1_MOSI
PA6_SPI1_MISO
PA5_SPI1_SCK
+5V_CH2
+3.3V
GND
VCC_USART
Power Level Selection
J4
C2 0.1u
USART
CN1
PC6_USART6_TX
PC7_USART6_RX
Radio
U1 LoRa1278-C1
GND
MISO
MOSI
SCK
NSS
NRESET
DIO5
DIO2
DIO1
DIO0
VCC
DIO4
DIO3
ANT
PA6_SPI1_MISO
PA7_SPI1_MOSI
PA5_SPI1_SCK
PC5_SPI1_NSS2
DIO5
DIO2
DIO1
PB15
DIO4
DIO3
C3 0.1u
C4 100u
U2 Ant
J5
I2C
CN2
CN3
VCC_I2C
PB4_I2C3_SDA
PA8_I2C3_SCL
Power Level Selection
J2
C1 0.1u
1-Wire
CN5
CN4
PC1_DQ
TITLE: Radio
REV: 1.0
SPORADIC
Company: Sporadic
Sheet: 1/1
Date: 2023-09-03
Drawn By: Denis Levent