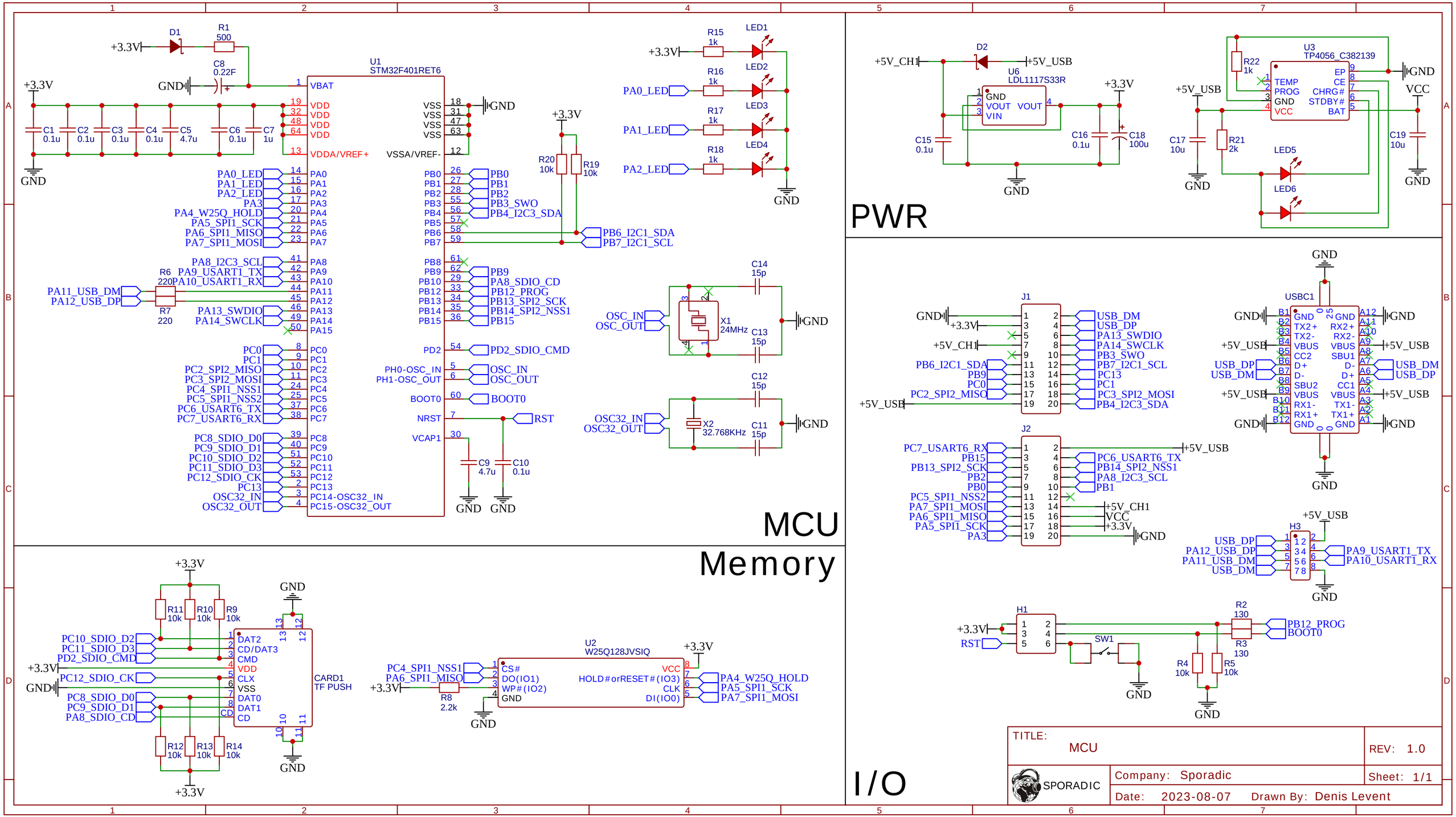
MCU
U1
STM32F401RET6
VBAT
VDD
VDDA/VREF+
VSS
VSSA/VREF-
PA0
PA1
PA2
PA3
PA4
PA5
PA6
PA7
PA8
PA9
PA10
PA11
PA12
PA13
PA14
PA15
PB0
PB1
PB2
PB3
PB4
PB5
PB6
PB7
PB8
PB9
PB10
PB12
PB13
PB14
PB15
PC0
PC1
PC2
PC3
PC4
PC5
PC6
PC7
PC8
PC9
PC10
PC11
PC12
PC13
PC14-OSC32_IN
PC15-OSC32_OUT
PD2
PH0-OSC_IN
PH1-OSC_OUT
BOOT0
NRST
VCAP1
PA0_LED
PA1_LED
PA2_LED
PA3
PA4_W25Q_HOLD
PA5_SPI1_SCK
PA6_SPI1_MISO
PA7_SPI1_MOSI
PA8_I2C3_SCL
PA9_USART1_TX
PA10_USART1_RX
PA11_USB_DM
PA12_USB_DP
PA13_SWDIO
PA14_SWCLK
PC0
PC1
PC2_SPI2_MISO
PC3_SPI2_MOSI
PC4_SPI1_NSS1
PC5_SPI1_NSS2
PC6_USART6_TX
PC7_USART6_RX
PC8_SDIO_D0
PC9_SDIO_D1
PC10_SDIO_D2
PC11_SDIO_D3
PC12_SDIO_CK
PC13
OSC32_IN
OSC32_OUT
PB0
PB1
PB2
PB3_SWO
PB4_I2C3_SDA
PB6_I2C1_SDA
PB7_I2C1_SCL
PB9
PA8_SDIO_CD
PB12_PROG
PB13_SPI2_SCK
PB14_SPI2_NSS1
PB15
PD2_SDIO_CMD
OSC_IN
OSC_OUT
BOOT0
RST
+3.3V
GND
D1
R1
500
C8
0.22F
C1 0.1u
C2 0.1u
C3 0.1u
C4 0.1u
C5 4.7u
C6 0.1u
C7 1u
R6 220
R7 220
R20 10k
R19 10k
R15 1k
R16 1k
R17 1k
R18 1k
LED1
LED2
LED3
LED4
C14 15p
C13 15p
X1 24MHz
C12 15p
C11 15p
X2 32.768KHz
C9 4.7u
C10 0.1u
PWR
D2
+5V_CH1
+5V_USB
U6
LDL1117S33R
GND
VOUT
VIN
C15 0.1u
C16 0.1u
C18 100u
U3
TP4056_C382139
TEMP
PROG
CHRG#
STDBY#
EP
CE
BAT
VCC
R22 1k
R21 2k
C17 10u
C19 10u
LED5
LED6
I/O
J1
J2
USBC1
GND
TX2+
TX2-
VBUS
CC2
D+
D-
SBU2
RX1-
RX1+
RX2+
RX2-
SBU1
CC1
TX1-
TX1+
USB_DM
USB_DP
PA13_SWDIO
PA14_SWCLK
PB3_SWO
PB7_I2C1_SCL
PC13
PC1
PC3_SPI2_MOSI
PB4_I2C3_SDA
PC6_USART6_TX
PB14_SPI2_NSS1
PA8_I2C3_SCL
PB1
VCC
H3
PA9_USART1_TX
PA10_USART1_RX
H1
SW1
R2 130
R3 130
R4 10k
R5 10k
PB12_PROG
BOOT0
Memory
R11 10k
R10 10k
R9 10k
R12 10k
R13 10k
R14 10k
CARD1
TF PUSH
DAT2
CD/DAT3
CMD
VDD
CLX
VSS
DAT0
DAT1
CD
PC10_SDIO_D2
PC11_SDIO_D3
PD2_SDIO_CMD
PC12_SDIO_CK
PC8_SDIO_D0
PC9_SDIO_D1
PA8_SDIO_CD
U2
W25Q128JVSIQ
CS#
DO(IO1)
WP#(IO2)
HOLD#orRESET#(IO3)
CLK
DI(IO0)
PC4_SPI1_NSS1
PA6_SPI1_MISO
R8 2.2k
PA4_W25Q_HOLD
PA5_SPI1_SCK
PA7_SPI1_MOSI
TITLE:
MCU
REV: 1.0
SPORADIC
Company: Sporadic
Sheet: 1/1
Date: 2023-08-07
Drawn By: Denis Levent