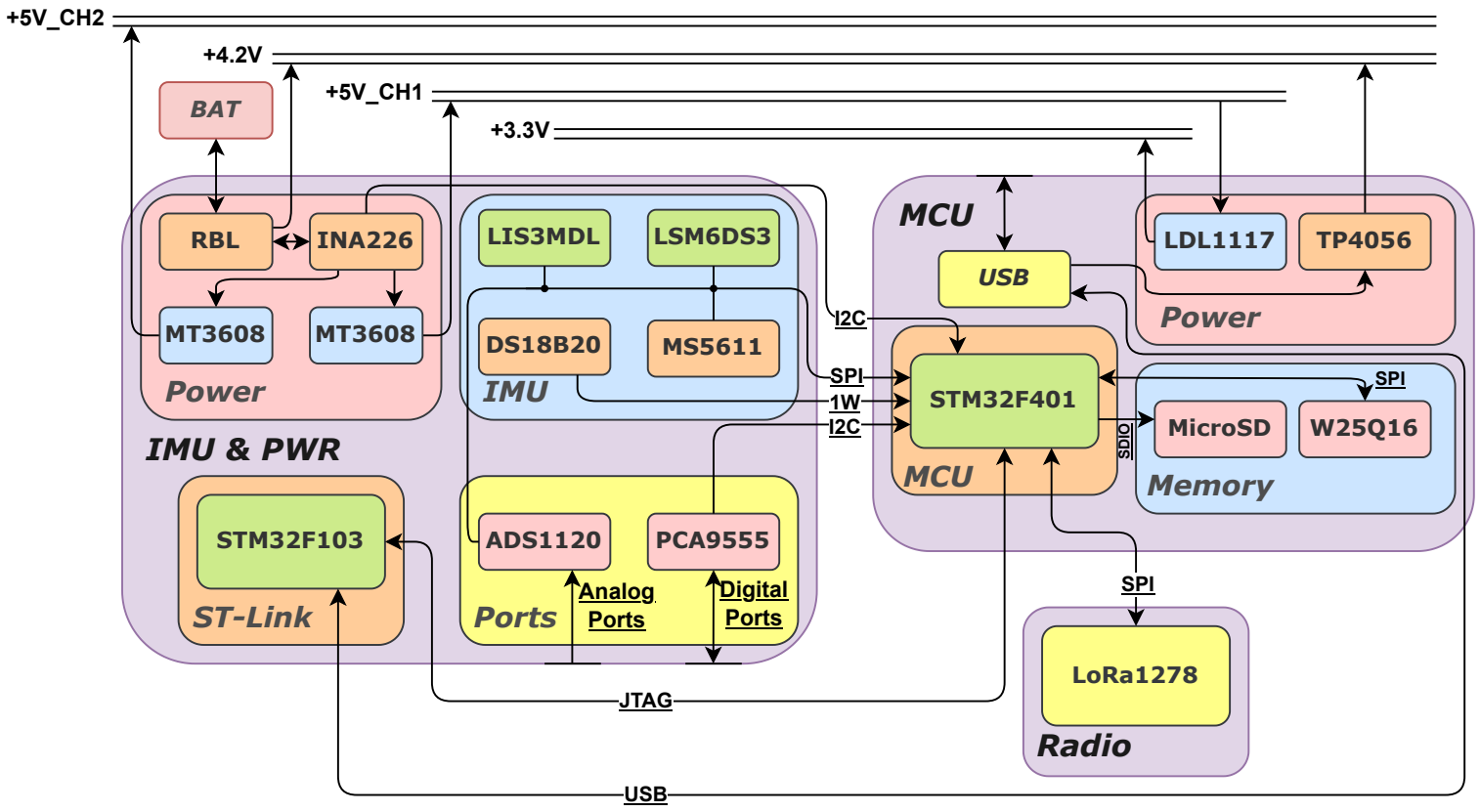
+5V_CH2
+4.2V
+5V_CH1
+3.3V
BAT
RBL
INA226
MT3608
MT3608
Power
IMU & PWR
LIS3MDL
LSM6DS3
DS18B20
MS5611
IMU
STM32F103
ST-Link
ADS1120
PCA9555
Analog Ports
Digital Ports
Ports
I2C
SPI
1W
I2C
MCU
USB
STM32F401
MCU
LDL1117
TP4056
Power
SPI
SDIO
MicroSD
W25Q16
Memory
SPI
LoRa1278
Radio
JTAG
USB