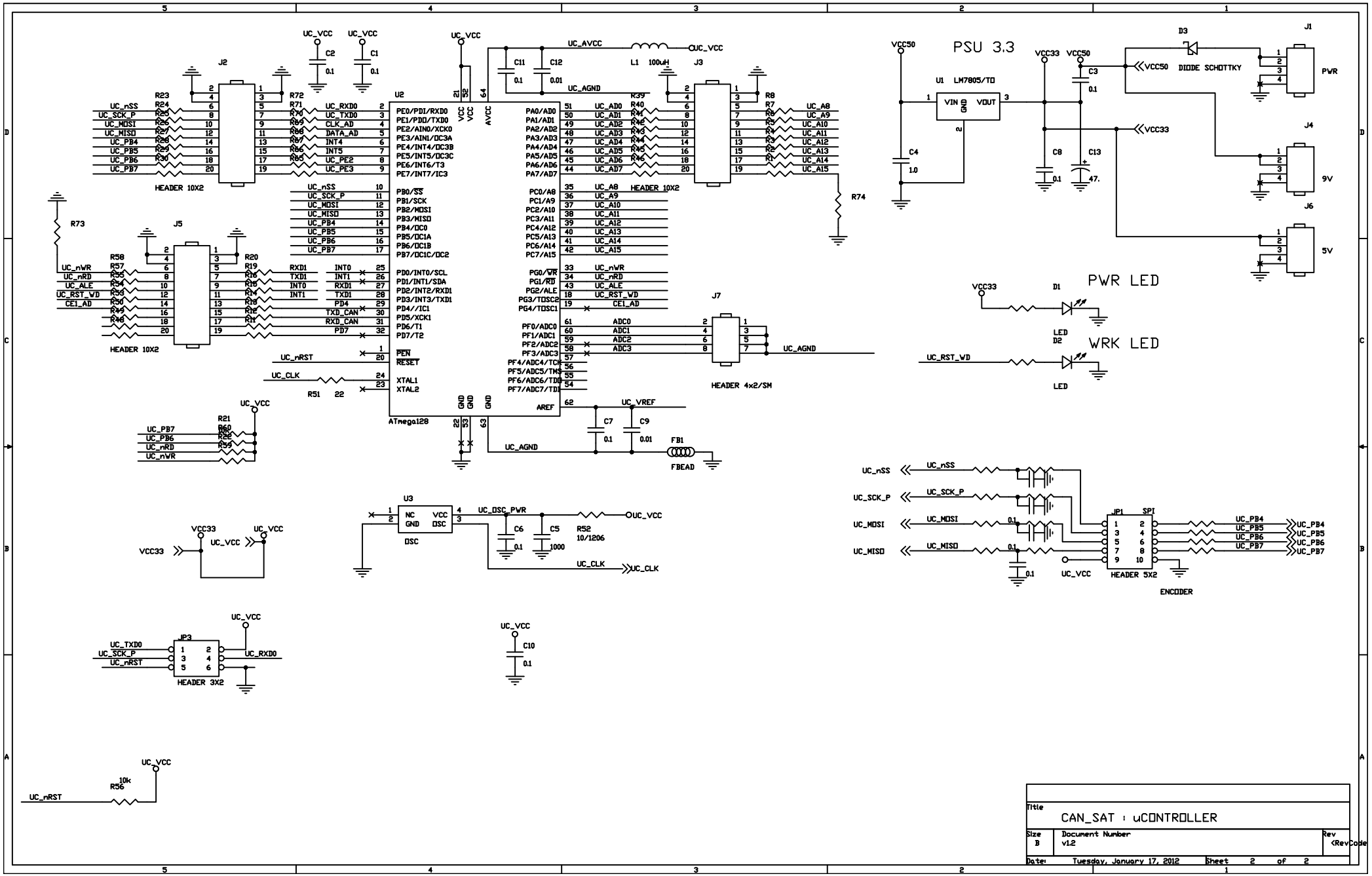
PSU 3.3
U1 LM7805/TO
VIN GND VOUT
D3
DIODE SCHOTTKY
J1
PWR
J4
9V
J6
5V
PWR LED
WRK LED
D1
D2
LED
U2
ATmega128
J2
HEADER 10X2
J3
HEADER 10X2
J5
HEADER 10X2
J7
HEADER 4x2/SM
U3
OSC
JP1
SPI
HEADER 5X2
ENCODER
JP3
HEADER 3X2
L1 100uH
FB1
FBEAD
R52
10/1206
R56
10k
Title
CAN_SAT : uCONTROLLER
Size
B
Document Number
v1.2
Rev
<RevCode
Date: Tuesday, January 17, 2012
Sheet 2 of 2